A5X Series 5.0 x 3.2 mm SMD Crystal

Feature

- AT-cut Crystal Construction
- Miniature Ceramic surface mount with Metal Lid
- High temperature, high precision and reliability Characteristics
- Pb-free and RoHS/Green compliant
- AEC-Q200 Qualified

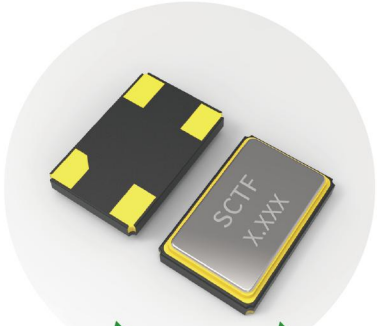

AEC-Q200 Pb free RoHS compliant

Applications

- Industrial Control & Automation
- ADAS
- LiDAR (Light Detection and Ranging)
- Power Control & Conversion

Electrical Specifications

Item	Symb.	Min.	Typ.	Max.	Unit	Notes
Frequency Range	Freq.	8.000		50.000	MHz	
Oscillation Mode		Fundamental (AT-cut)				
Frequency Tolerance	△f/f			±10	ppm	at 25°C±2°C
Operating Temperature	T_use	-40		85	°C	
		-40		105	°C	
		-40		125	°C	
StorageTemperature Range	T_sta	-55		125	°C	
Shunt Capacitance	C0			5	pF	
Drive Level	DL		10	300	μW	
Load Capacitance	CL	8		20	pF	
Insulation Resistance	IR			500	MΩ	at DC 100V
Aging	f_age			3	ppm	1st. Year at 25°C

Frequency Stability & Operating Temperature Range

Temp. \ FT	±15ppm	±20ppm	±30ppm	±50ppm
-40°C to +85°C	△	★	★	★
-40°C to +105°C		△	★	★
-40°C to +125°C			△	★

★: Available △: Conditional

Equivalent Series Resistance

Frequency Range	ESR(Max.)
8MHz≤ Freq. <10MHz	100 Ω
10MHz≤ Freq. <16MHz	80 Ω
16MHz≤ Freq. <20MHz	50 Ω
20MHz≤ Freq. <24MHz	40 Ω
24MHz≤ Freq. ≤50MHz	30 Ω

Dimensions (UNIT:mm)

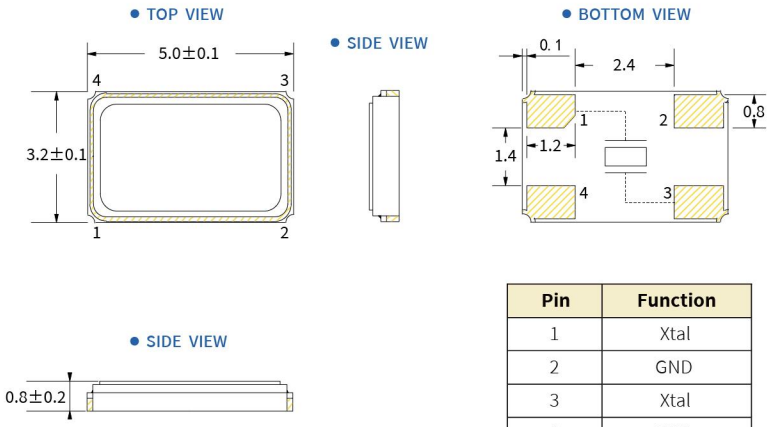

Pin	Function
1	Xtal
2	GND
3	Xtal
4	GND

Solder pad layout (UNIT:mm)

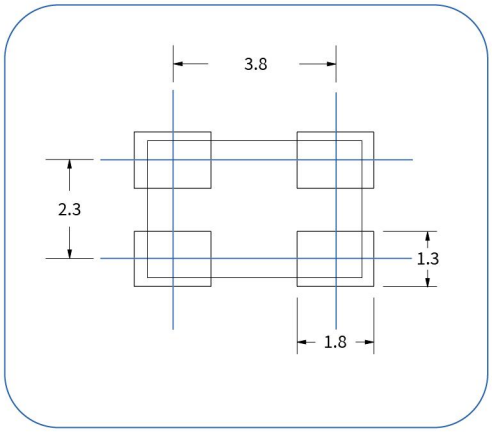

Frequency Temperature Characteristics

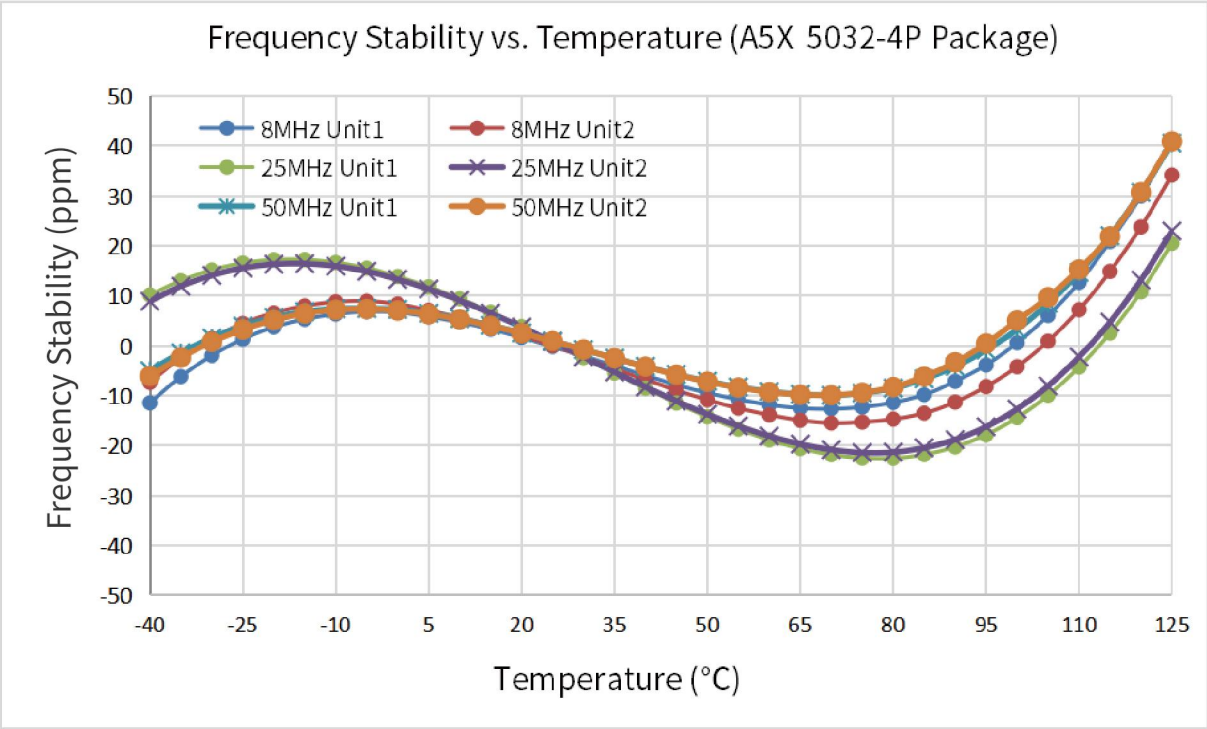

Product Structure&Marking Information

- Product Structure

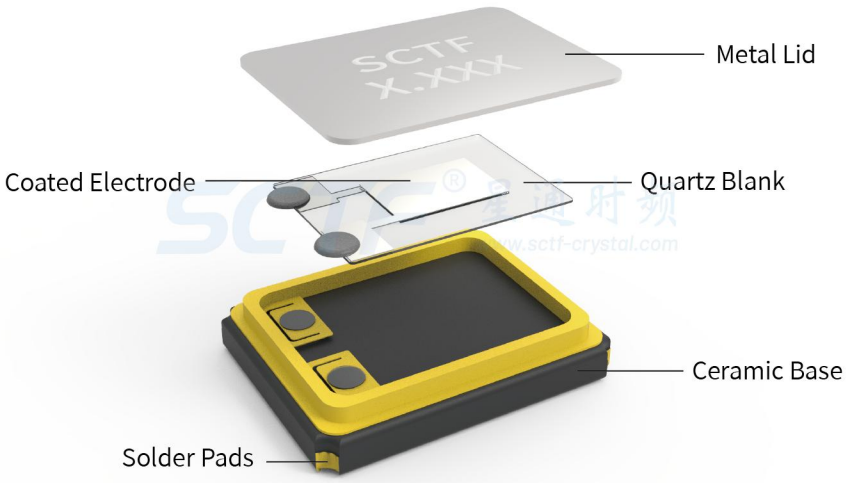

- Marking Information

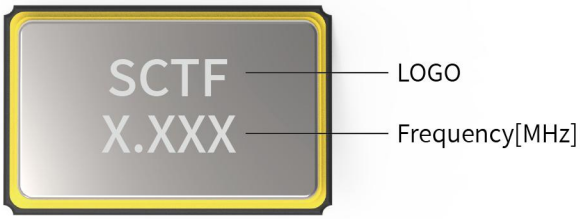

Suggested Reflow Profile

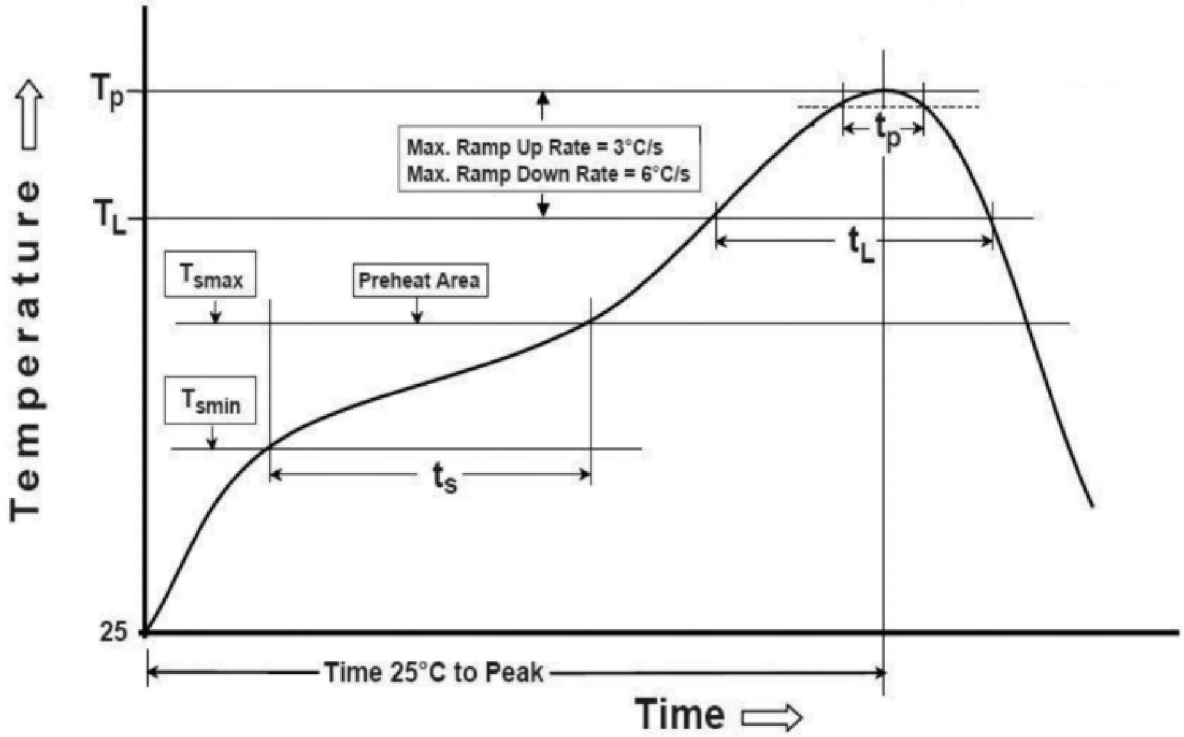

Profile Feature	Sn - Pb Eutectic Assembly	Preheat / Soak
Preheat / Soak ● Temperature Min (Ts min) ● Temperature Max (Ts max) ● Time (Ts min to Ts max)	100°C 150°C 60-120 seconds	150°C 200°C 60-120 seconds
Ramp - up rate (TL to Tp)	3°C/ second max.	3°C/ second max.
Time maintained above ● Liquidous temperature (TL) ● Time (tL) maintained above TL	183°C 60-150 seconds	217°C 60-150 seconds
Peak package body temperature (Tp)	235°C	260°C
Time within 5° C of the specified classification temperature (Tp)	20 seconds	30 seconds
Ramp - down rate (Tp to TL)	6°C/ second max.	6°C/ second max.
Time 25° C to peak temperature	6 minutes max.	8 minutes max.
Suggust reflow times	**2 Times max.**	

Packaging Information

T=Tape and reel (1,000pcs/reel)

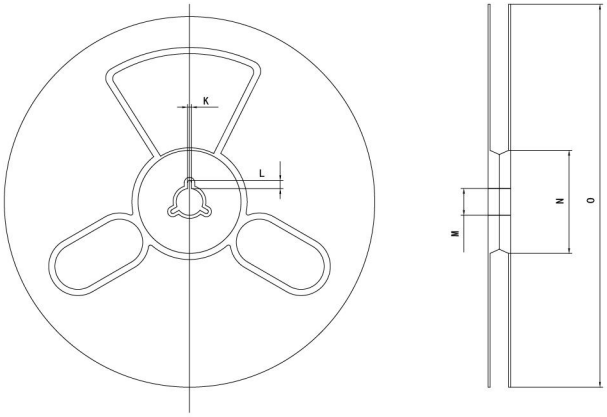

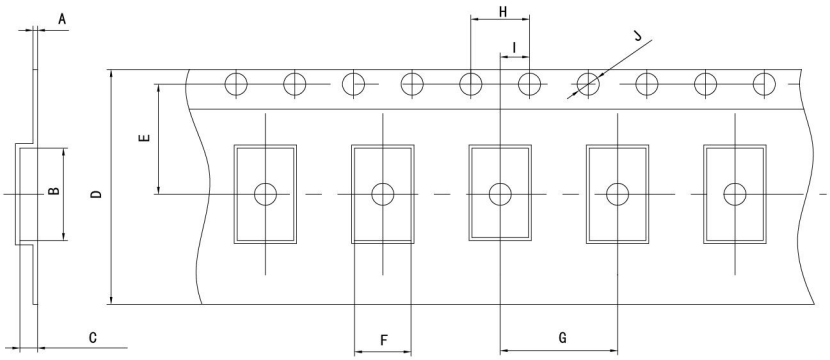

Pocket Tape Dimensions(mm)

Series	A	B	C	D	E	F	G	H	I	J	K	L	M	N	O
A5X	0.3±0.05	5.4±0.1	1.2±0.1	12±0.3	5.5±0.1	3.6±0.1	8.0±0.1	4.0±0.1	2.0±0.1	ϕ1.5±0.1	2.0±0.2	4.0±1.0	ϕ13±0.5	ϕ60±1	ϕ180±1

Common Frequencies – MHz

A5X Series				
8.000	8.192	10.000	11.0592	11.2896
12.000	12.288	13.000	13.560	14.31818
14.7456	16.000	16.384	18.432	19.6608
20.000	22.1184	24.000	24.576	25.000
26.000	27.000	27.120	28.63636	30.000
32.000	40.000	48.000	50.000	